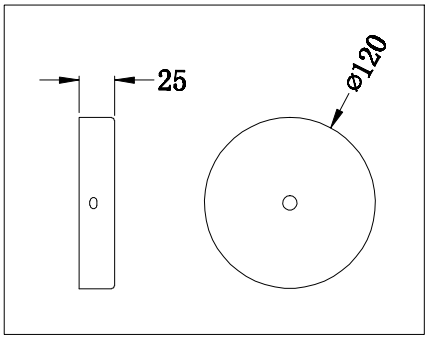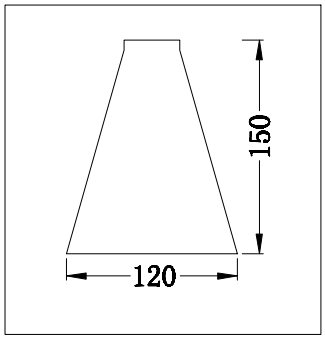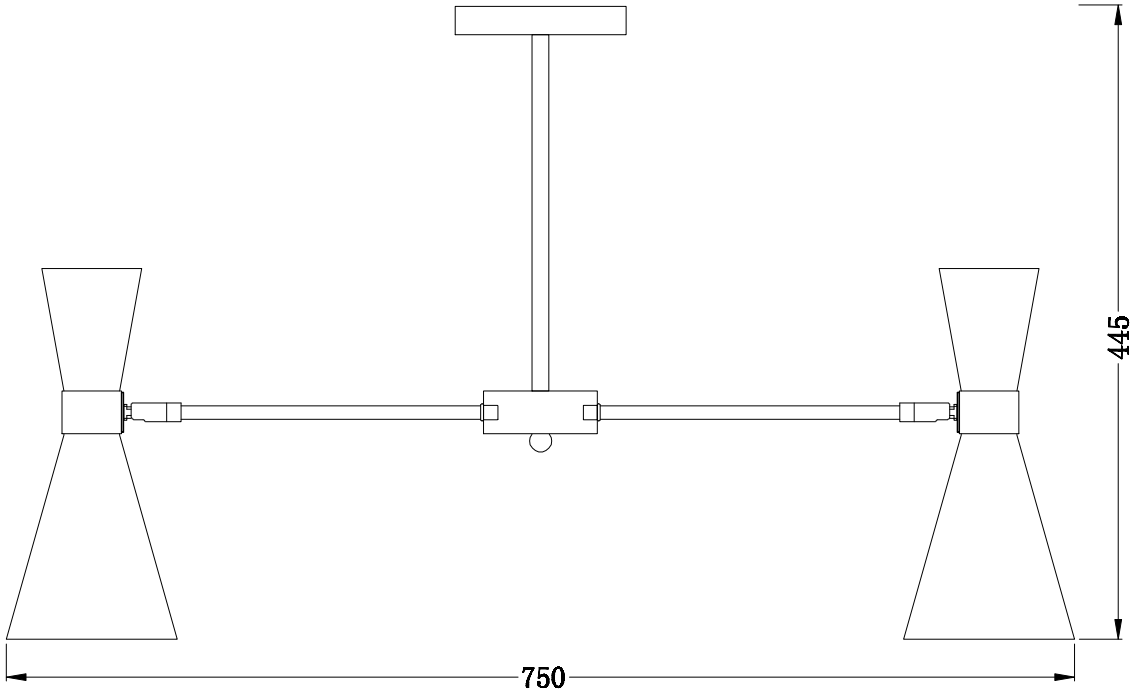# 3662/6C