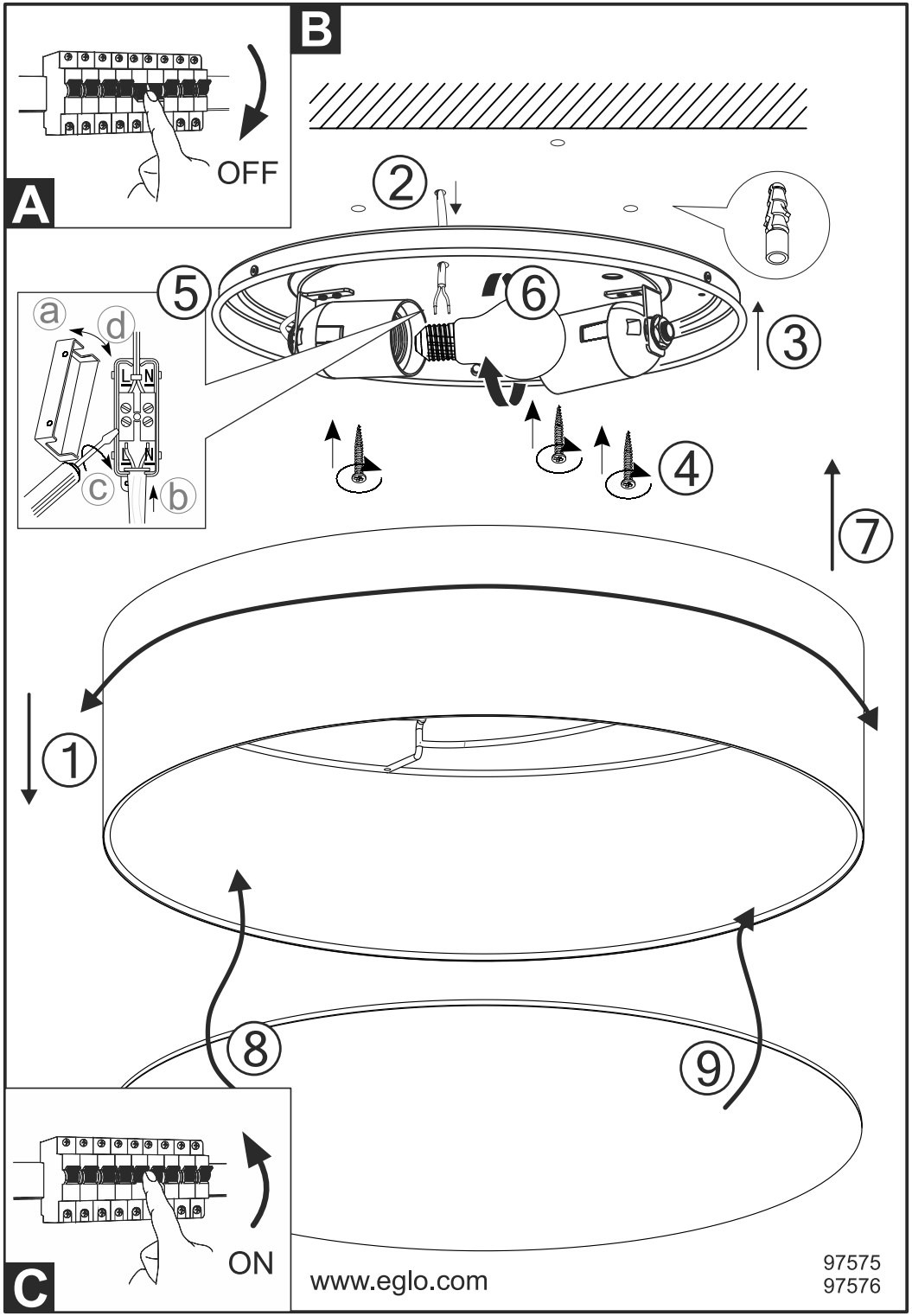

www.eglo.com

97575
97576