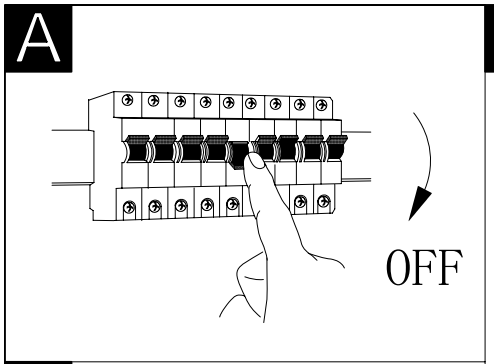
A
OFF

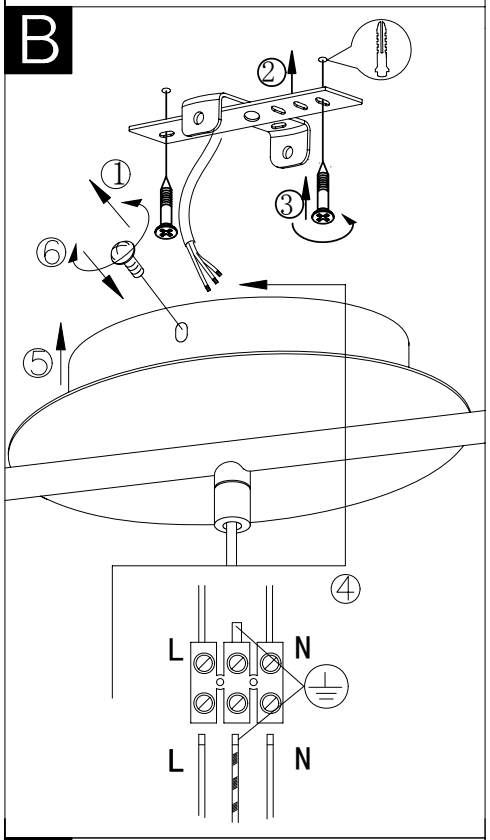
B
①
②
③
④
⑤
⑥
L
N
L
N

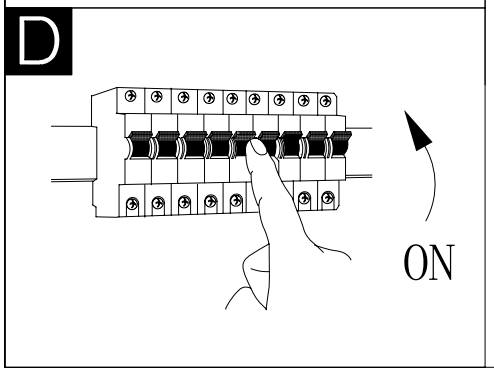
D
ON

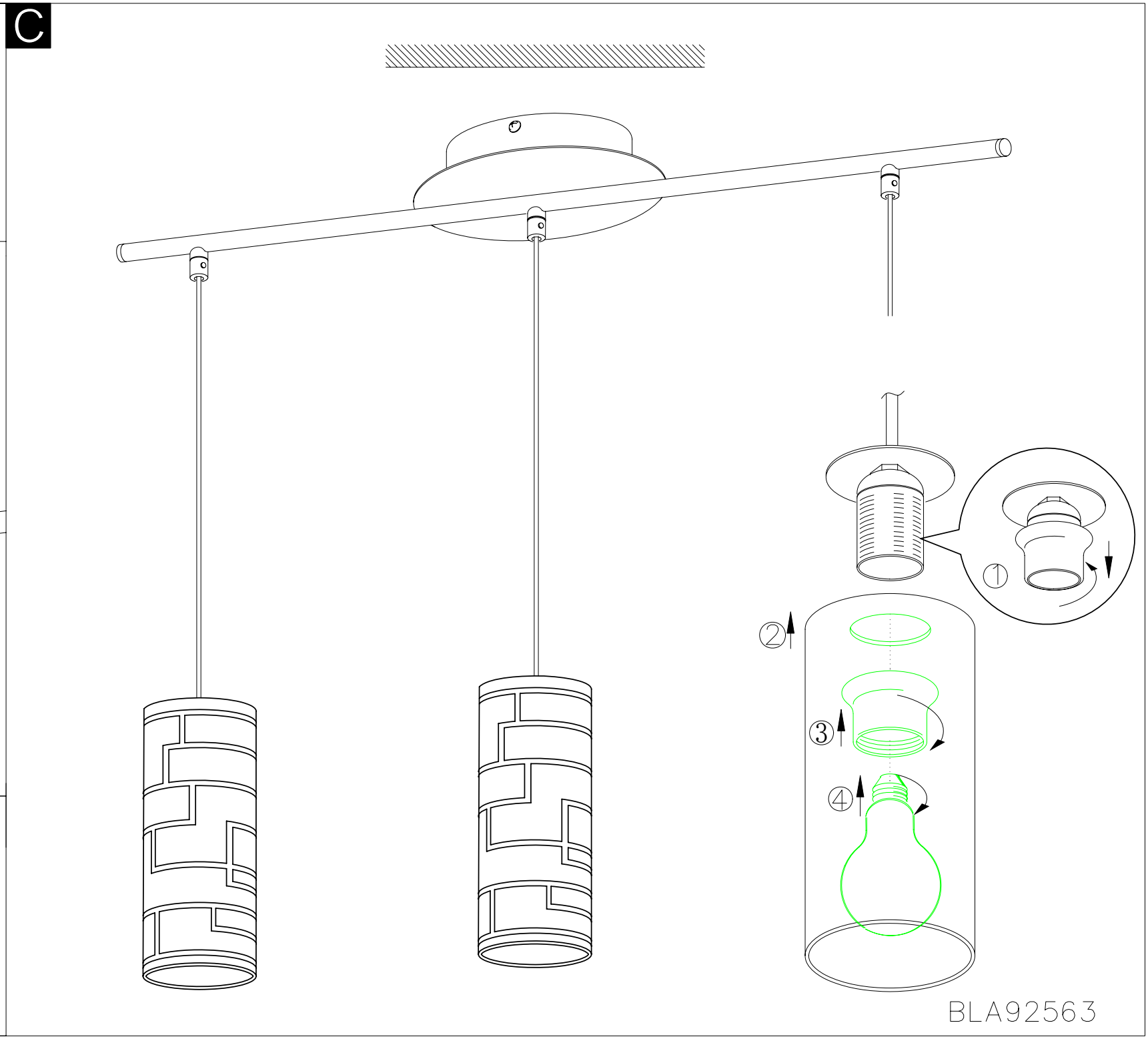
C
①
②
③
④
BLA92563