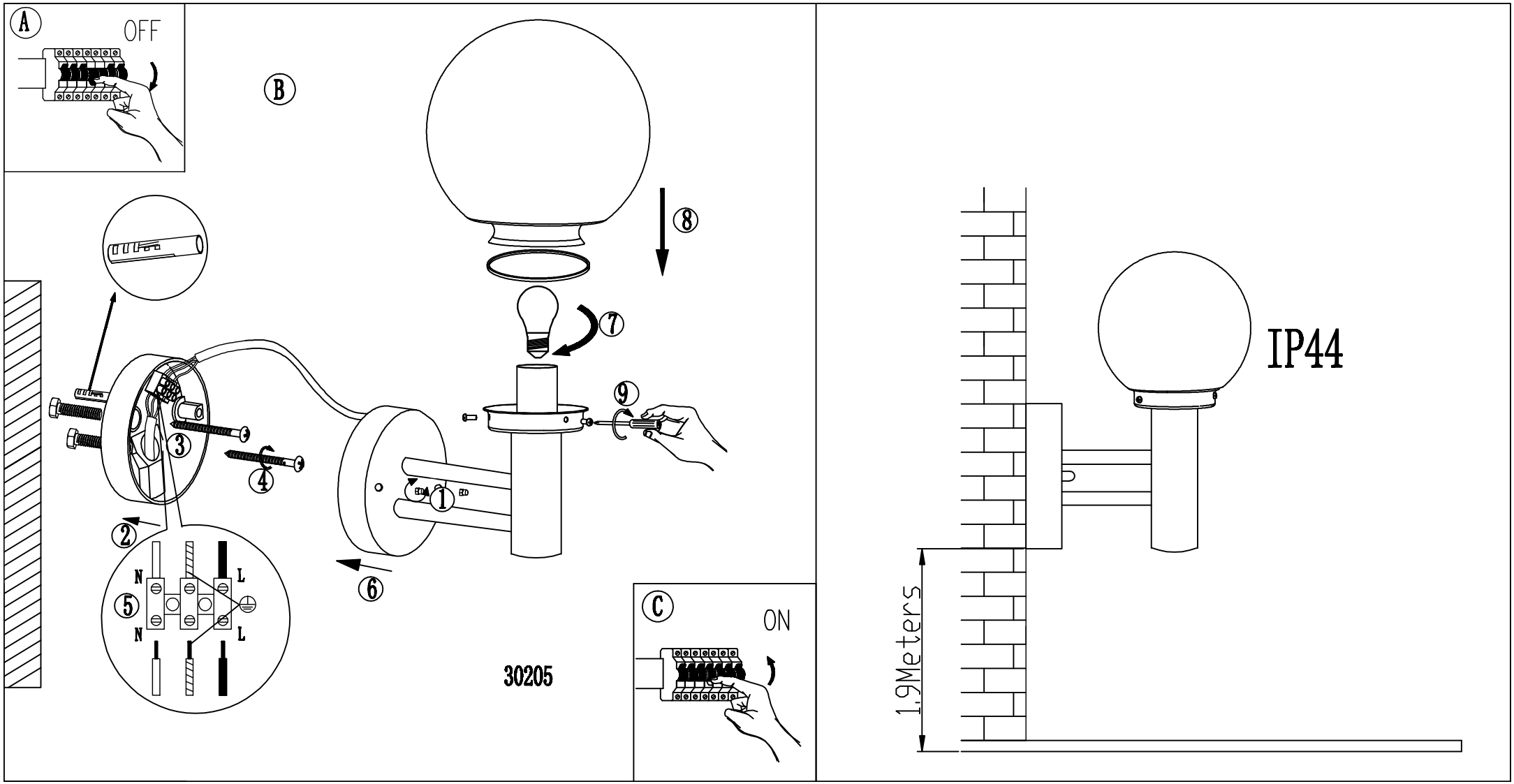
A
OFF
B
C
ON
1
2
3
4
5
6
7
8
9
N
L
N
L
30205
IP44
1.9Meters