ARTE LAMP

ASSEMBLY INSTRUCTION

A7141PL-5WH

ИНСТРУКЦИЯ

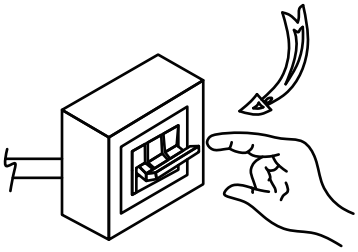

OFF 1

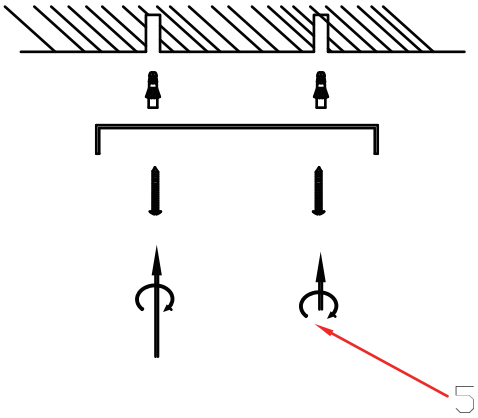

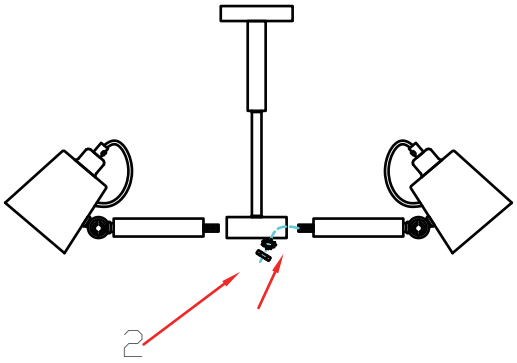

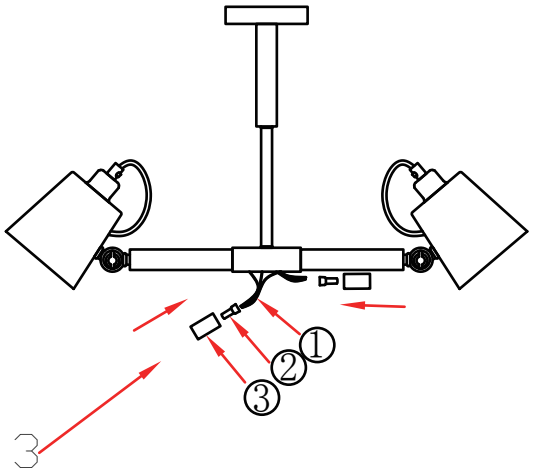

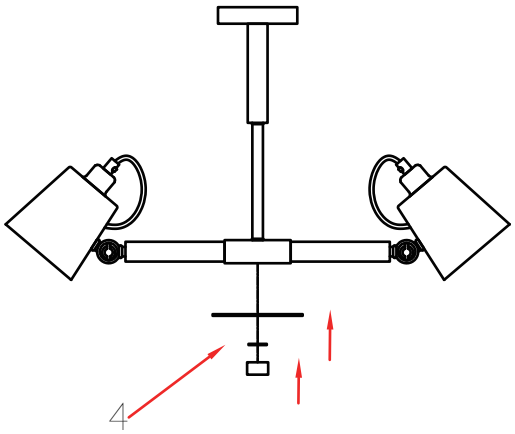

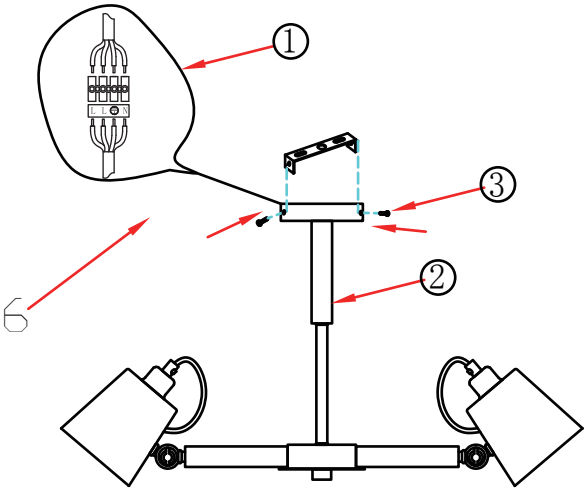

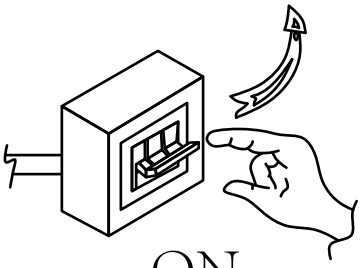

ON 7