ARTE LAMP

ASSEMBLY INSTRUCTION

A6049PL-6WH

ИНСТРУКЦИЯ

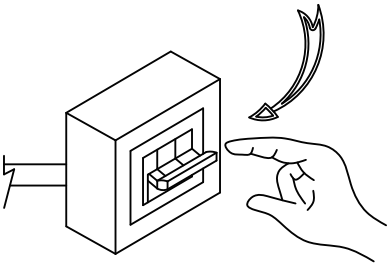

OFF 1

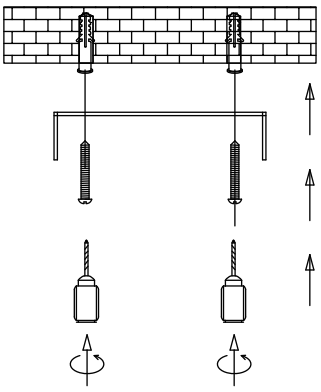

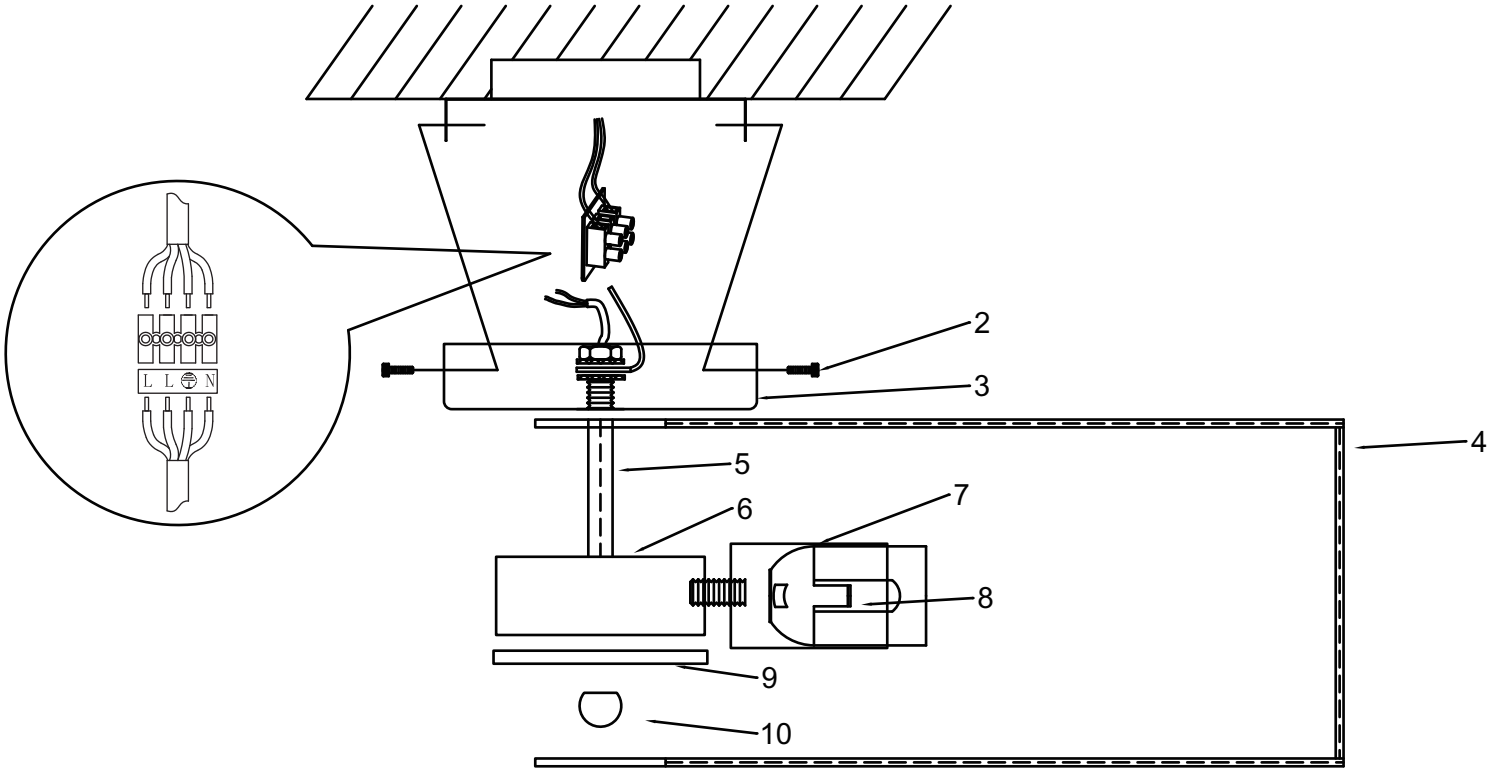

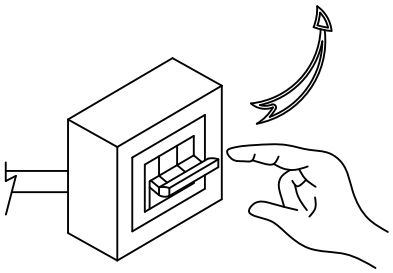

ON 11