ARTE LAMP

ASSEMBLY INSTRUCTION

A5004PL-3WG

CE

ИНСТРУКЦИЯ

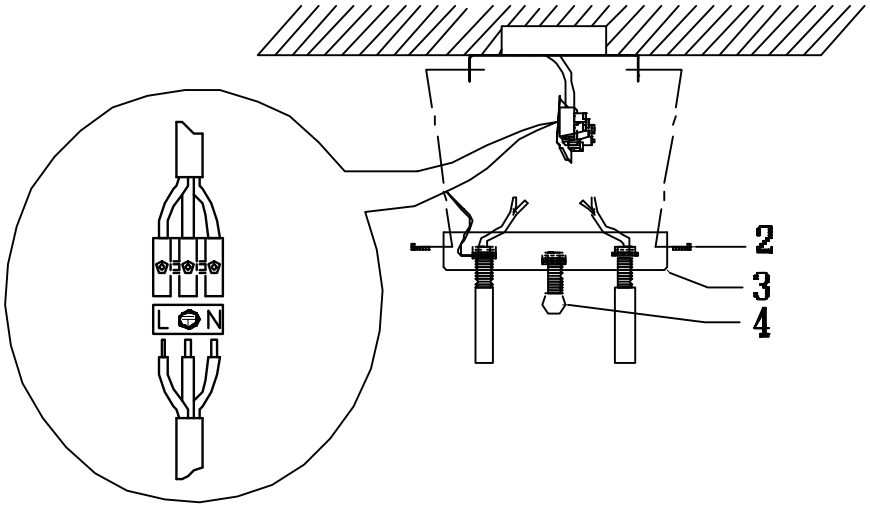

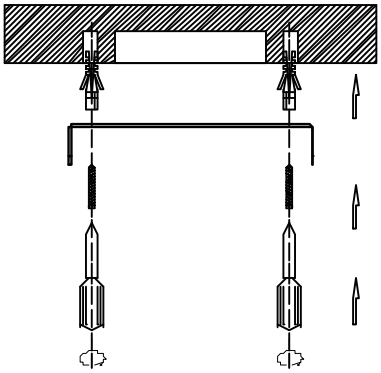

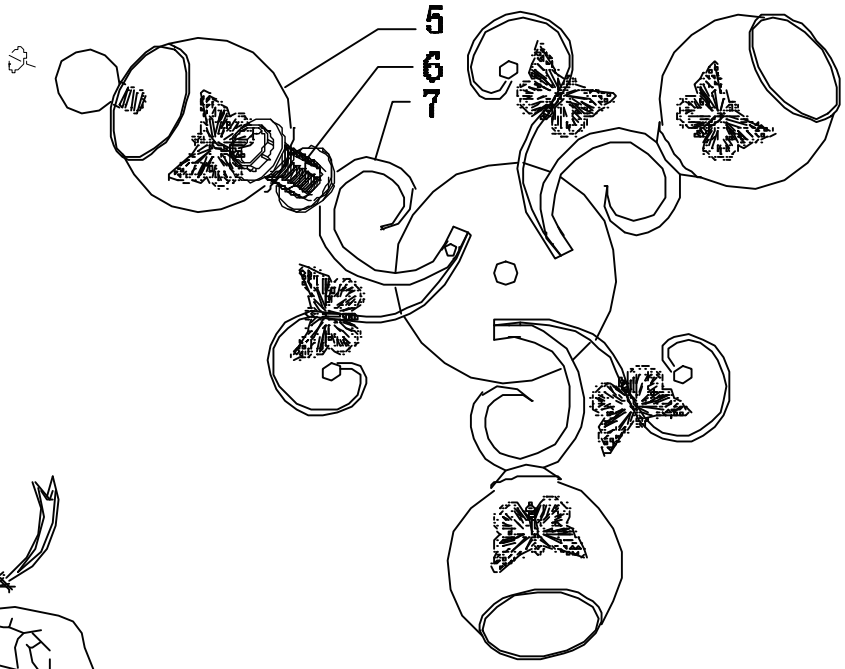

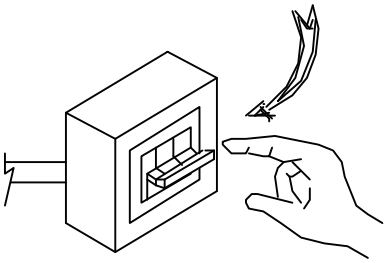

OFF 1

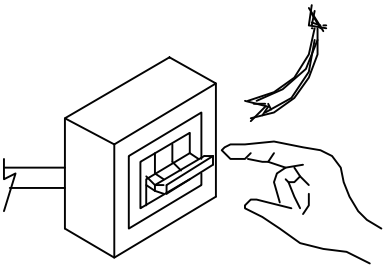

ON 8