ARTE LAMP

ASSEMBLY INSTRUCTION

ИНСТРУКЦИЯ
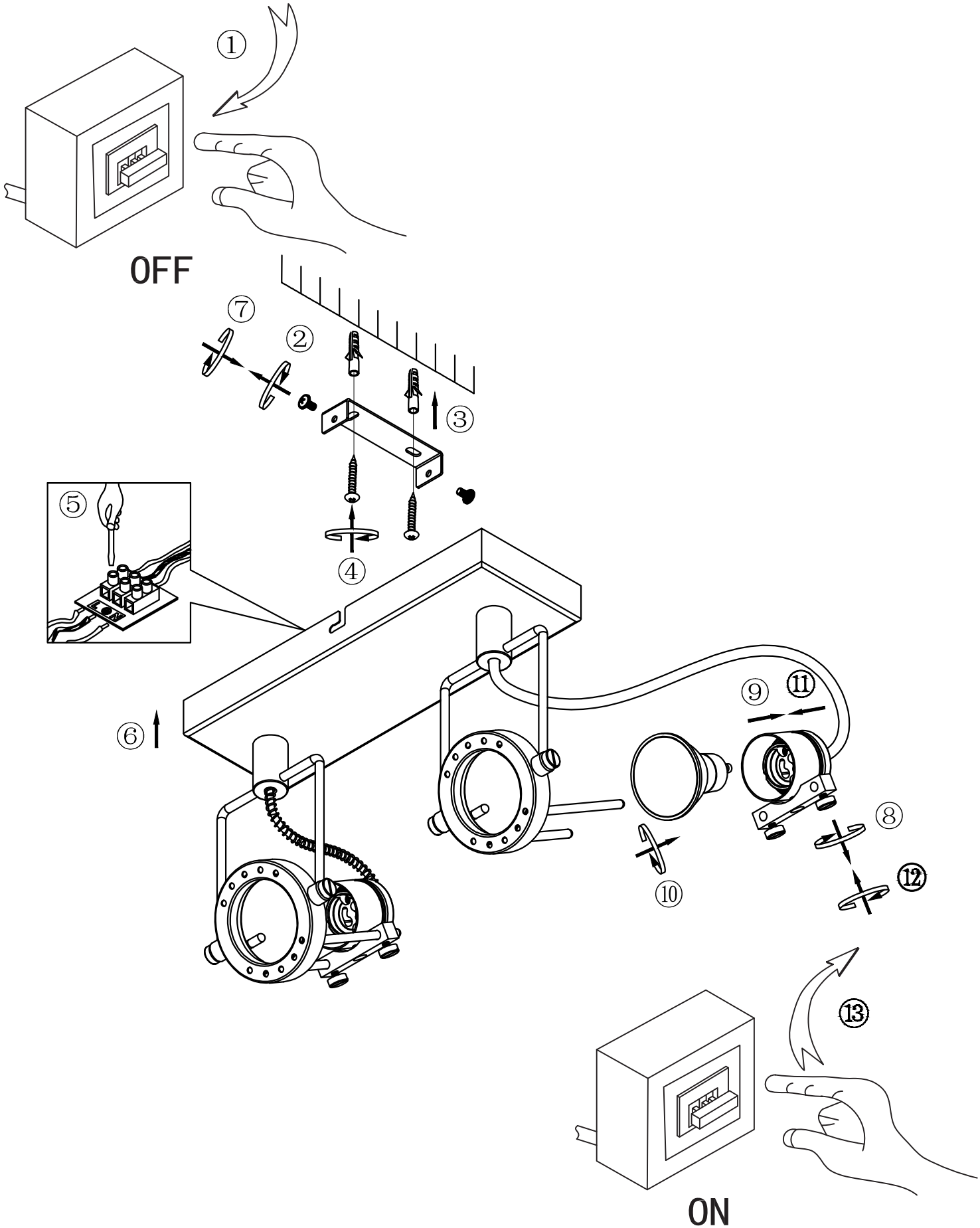
A4300AP-2