ARTE LAMP

ASSEMBLY INSTRUCTION

A
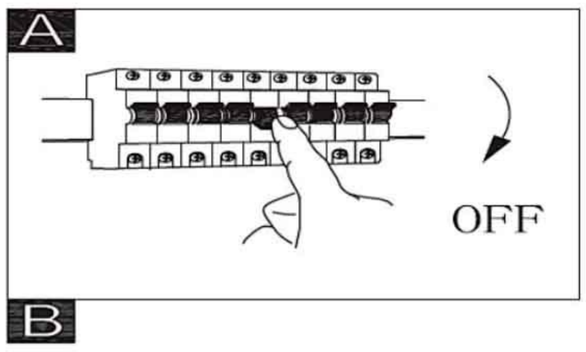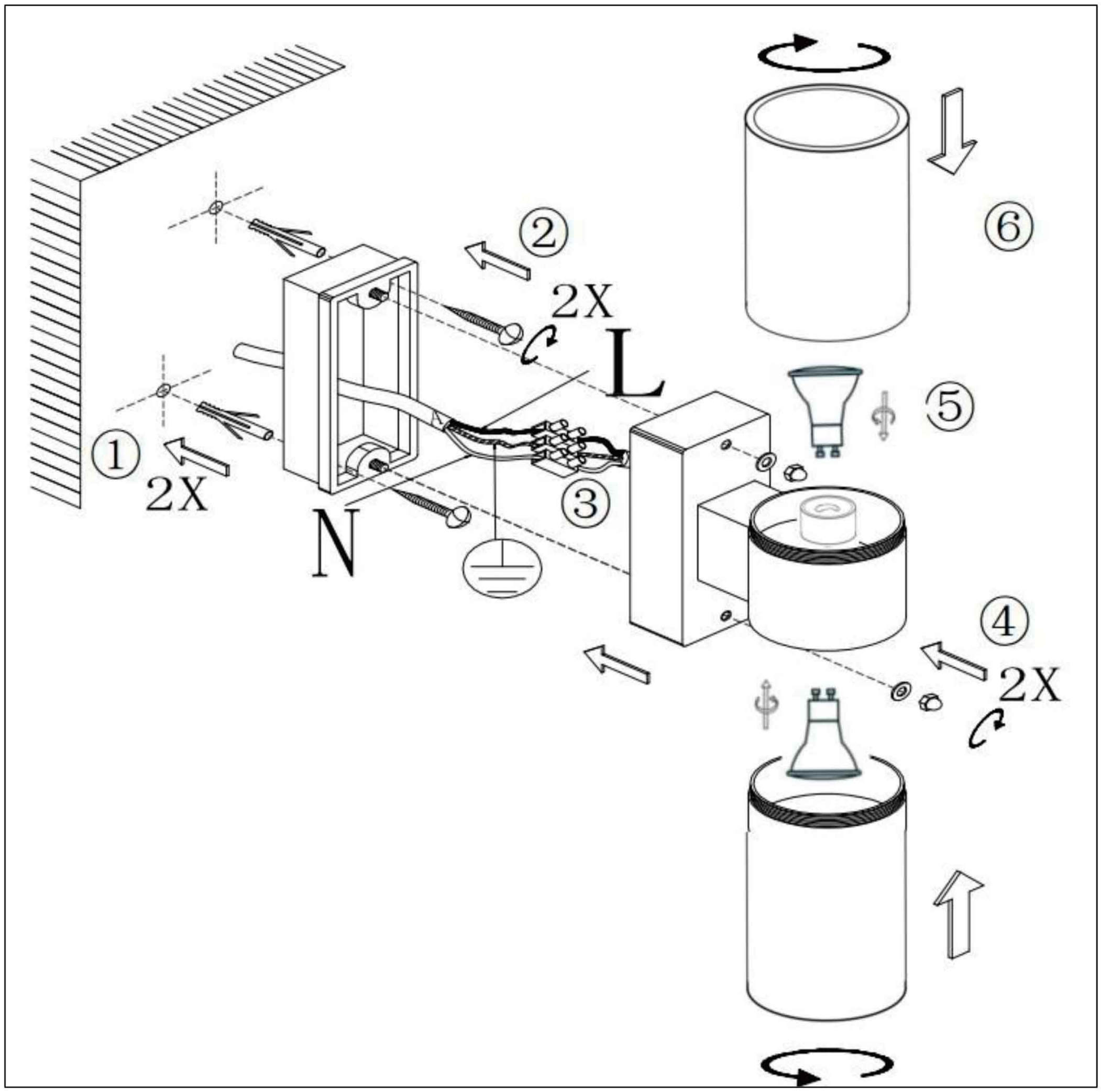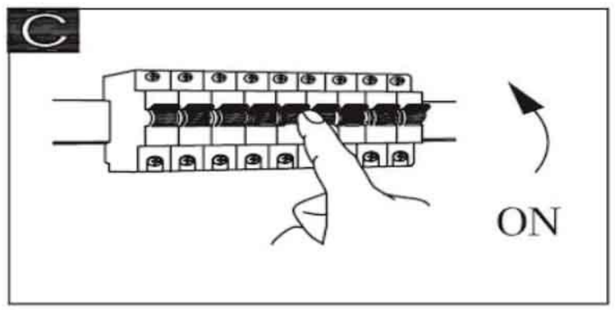
ИНСТРУКЦИЯ A3302AL-2GY