ARTE LAMP

ASSEMBLY INSTRUCTION

ИНСТРУКЦИЯ

A3102AL-2GY
A3102AL-2WH
A3102AL-2BK
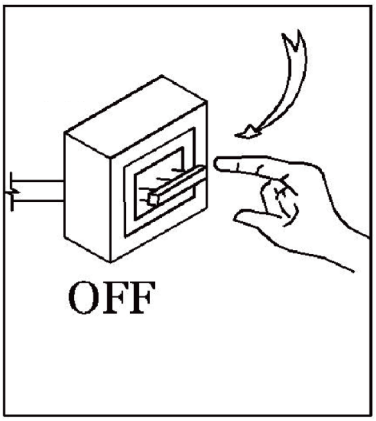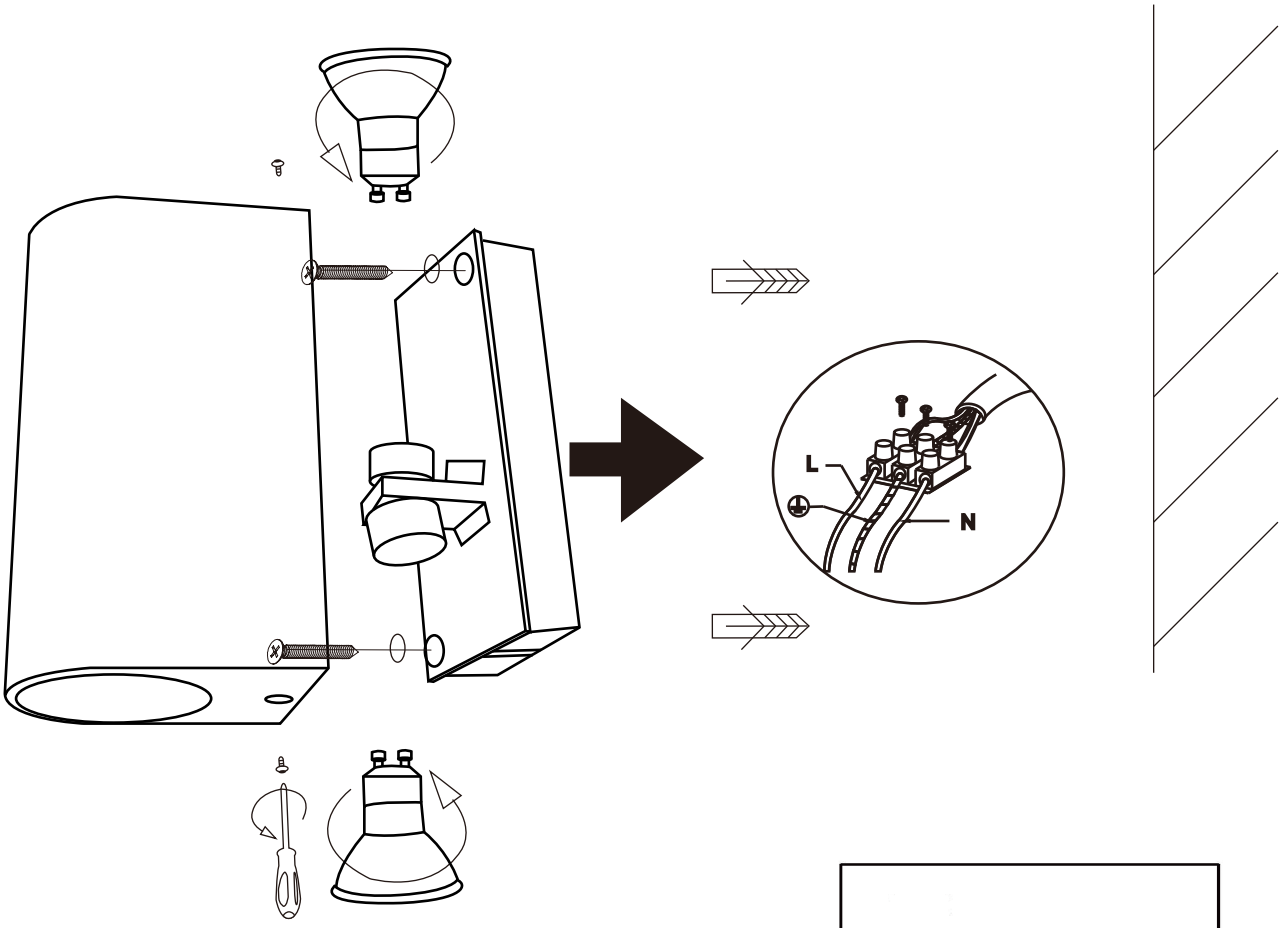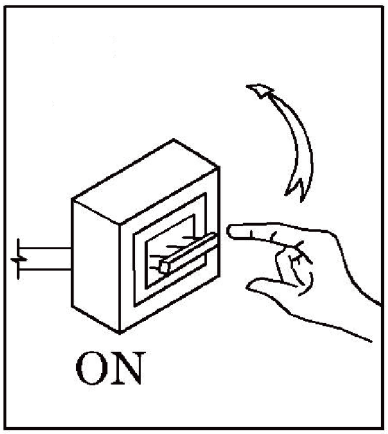
A