ARTE LAMP

ASSEMBLY INSTRUCTION

A3064SP-12WH
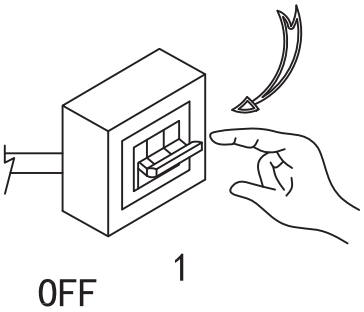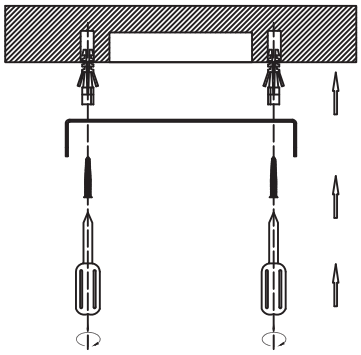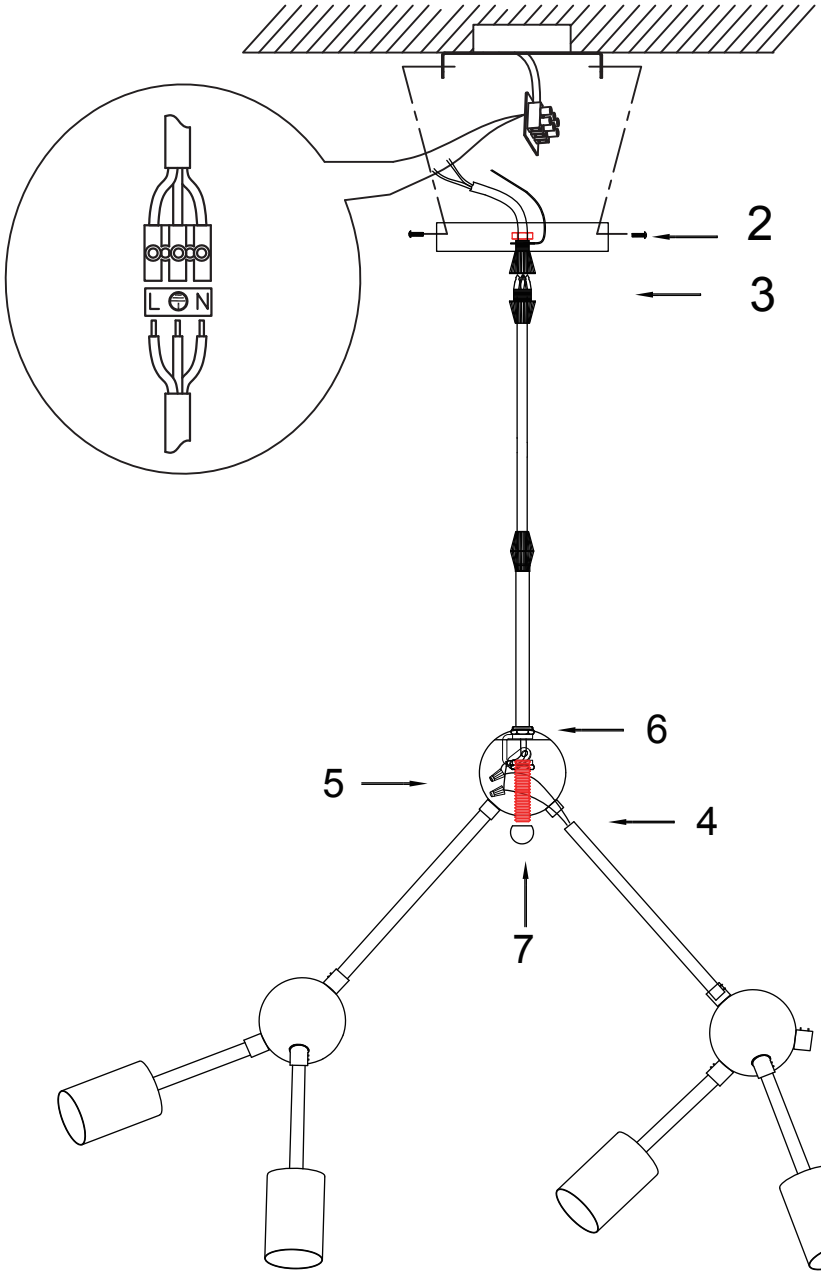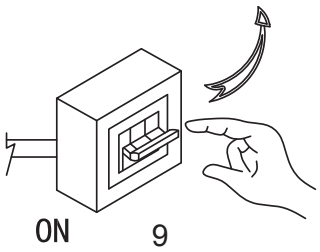
ИНСТРУКЦИЯ