ARTE LAMP

A2872LT-1AB
A2872LT-1SS

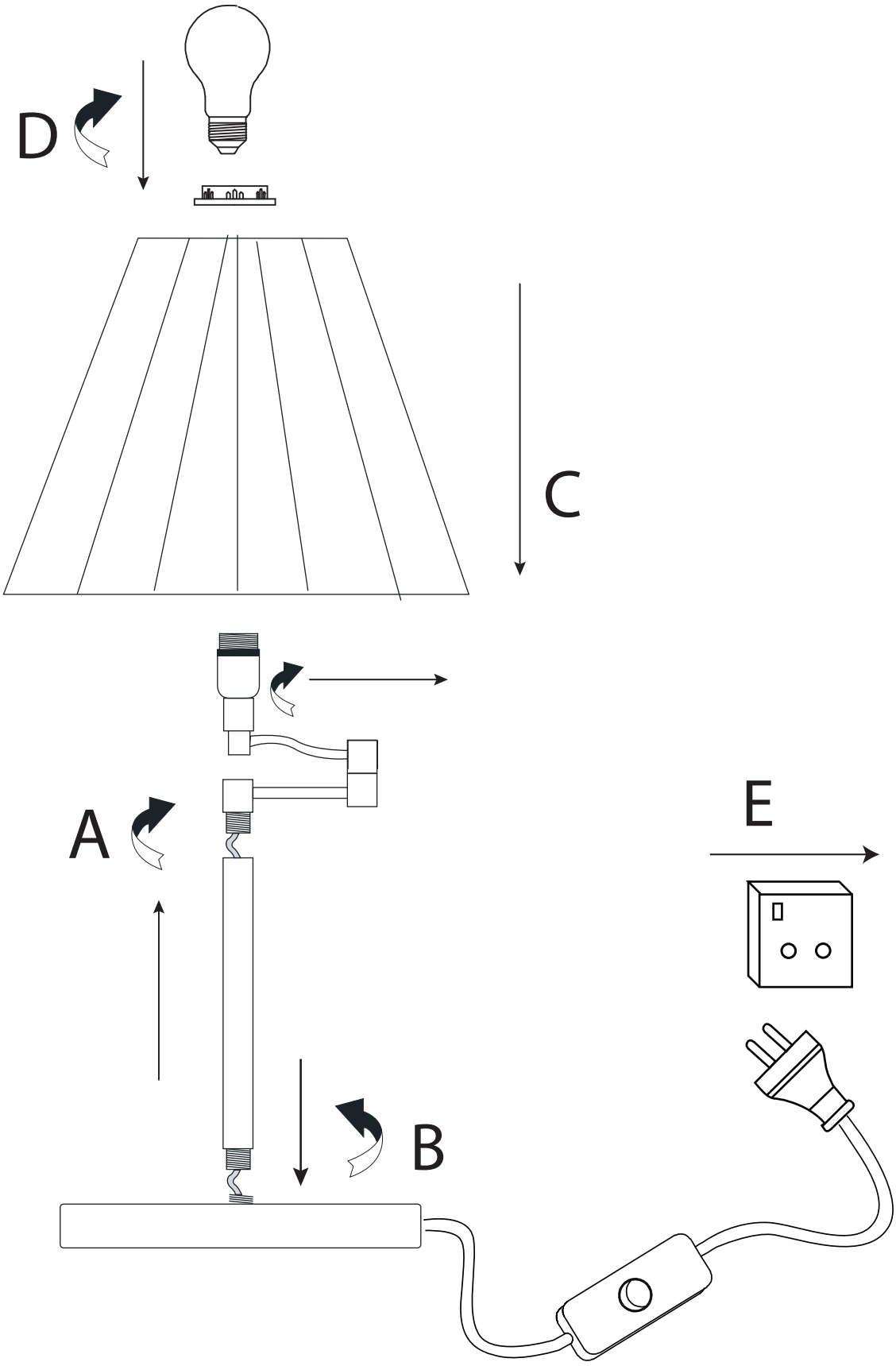

ART000193