ARTE LAMP

ASSEMBLY INSTRUCTION
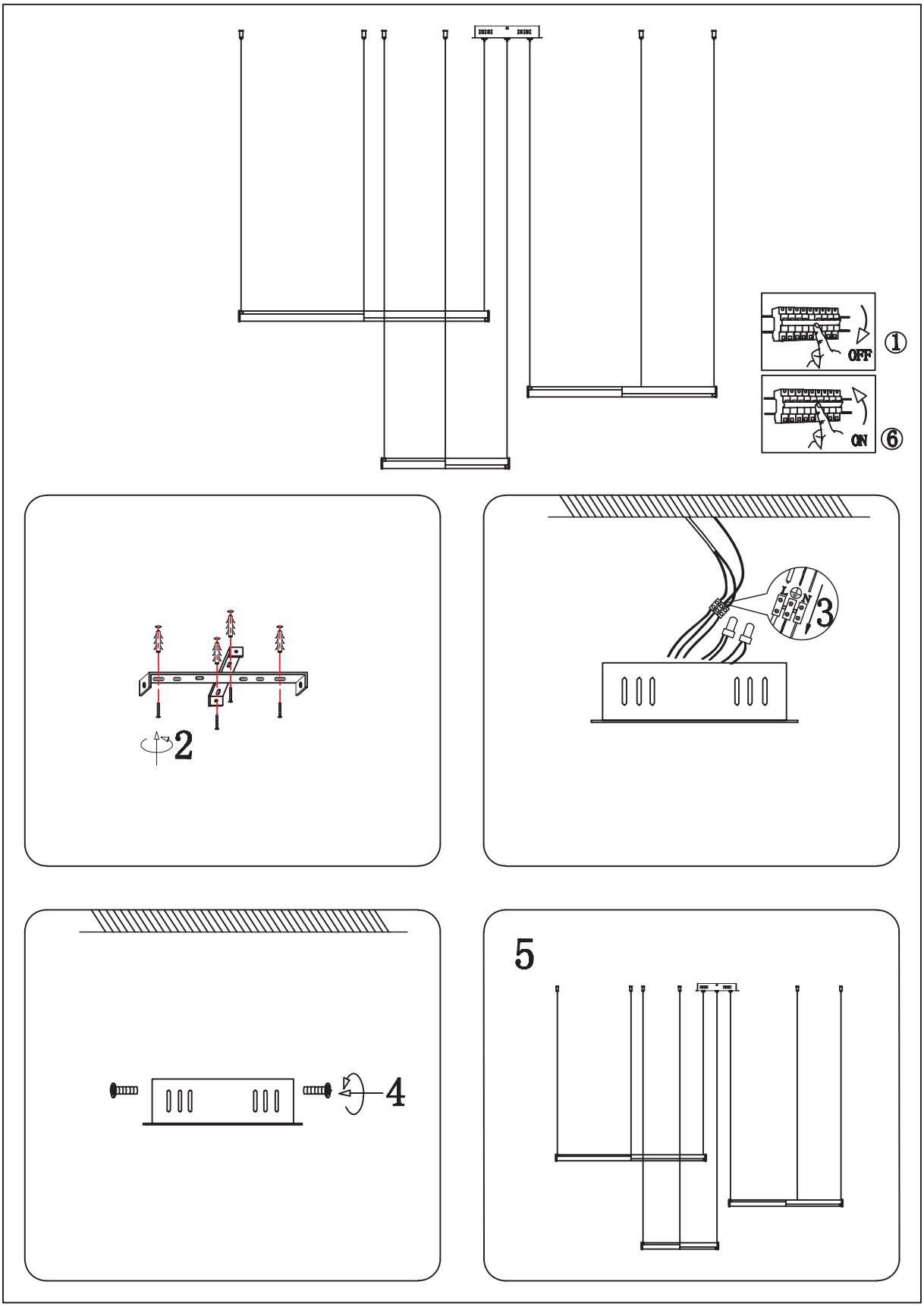
ИНСТРУКЦИЯ A2180SP-60WH