ARTE LAMP

ASSEMBLY INSTRUCTION

ИНСТРУКЦИЯ

A
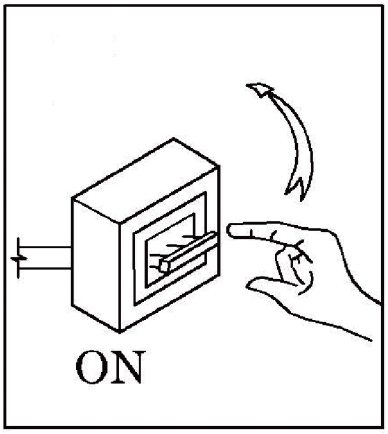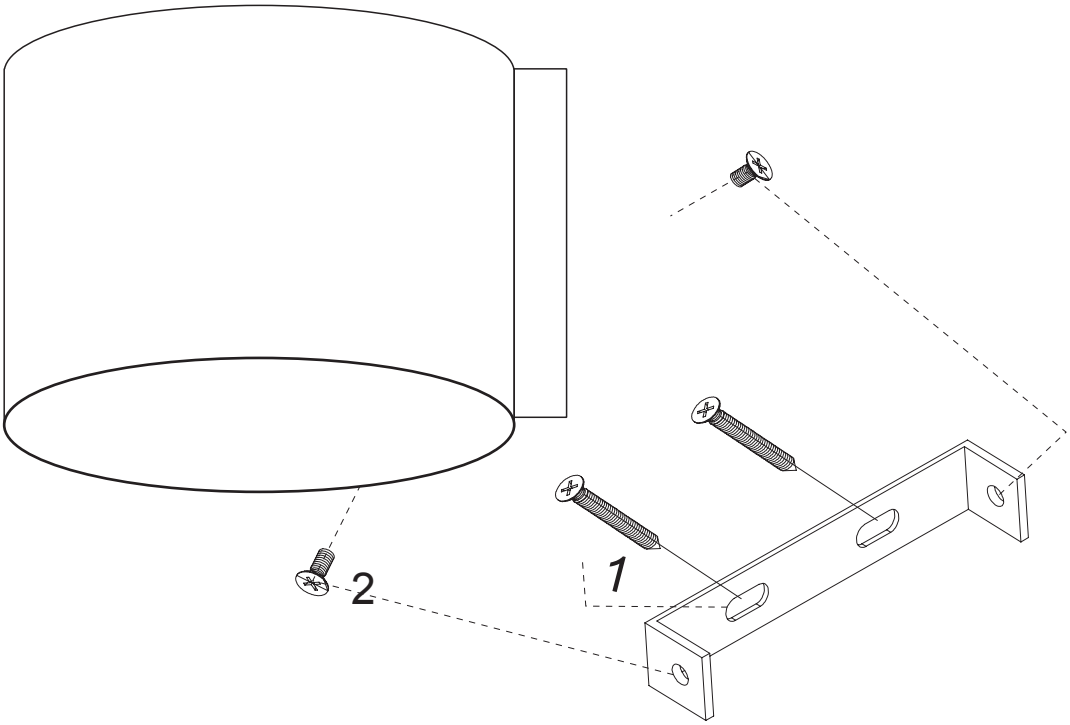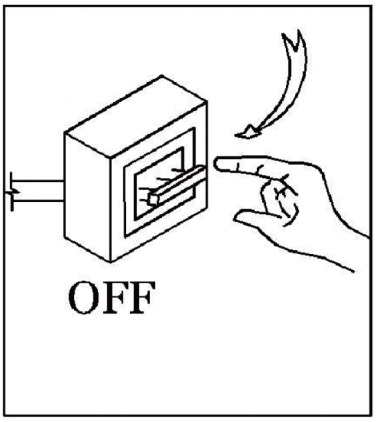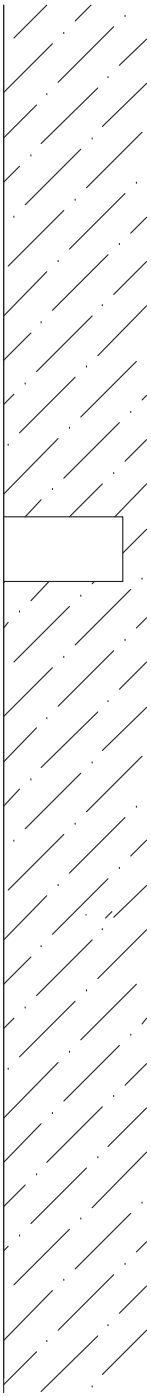
A1417AP-1WH
A1417AP-1GY