ARTE LAMP

ASSEMBLY INSTRUCTION

ИНСТРУКЦИЯ
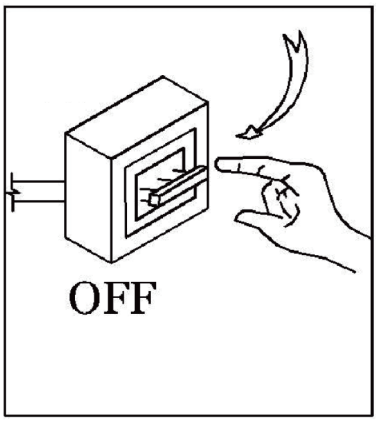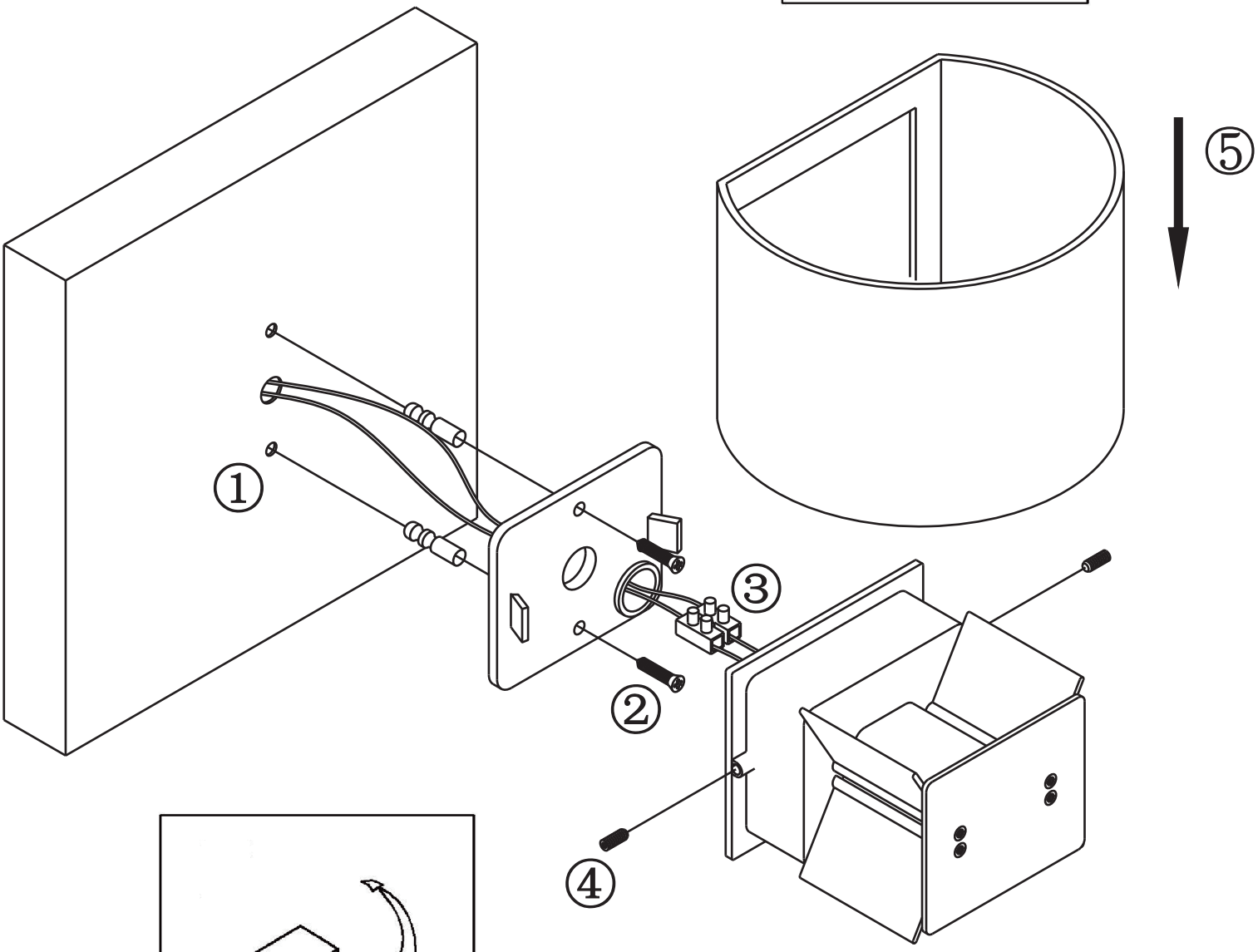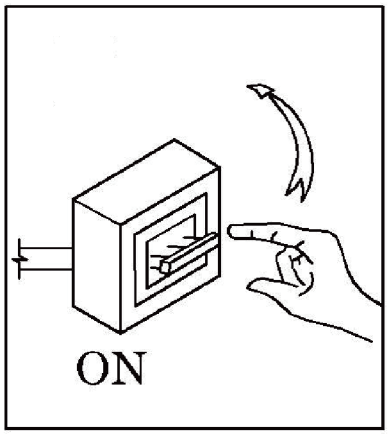
A1415AL-1WH
A1415AL-1GY