ARTE LAMP
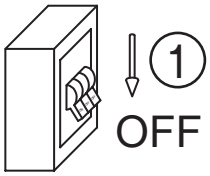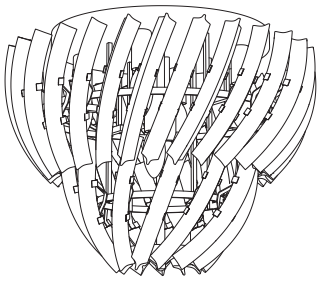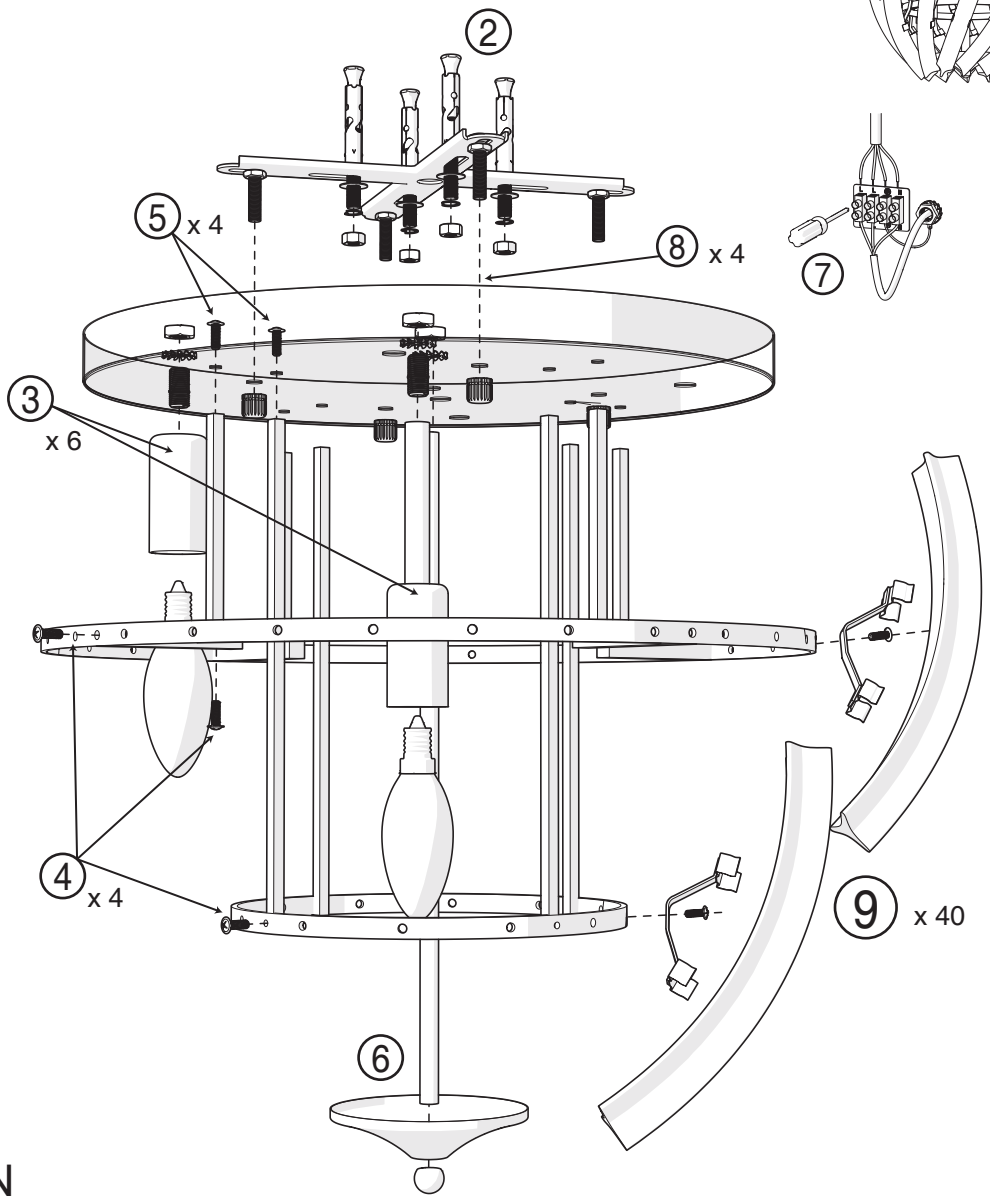
ASSEMBLY INSTRUCTION
ИНСТРУКЦИЯ
A1054PL-6CC